Angel F. Avila

Phase 1

Requirements

- Block diagram
- System cost
- system power
- System Power Consumption
- PCB Design
- Alternative design

Max weight = 200g

$147.00 Budget.

Old board Components

- Led's = 4 (internal) (Red, D7) (Yellow, D9) (Blue, D6) (Green, D5)
- 330Ω Resistors: 6
- 2: Pin Head, male to male on D3 and D4 external LED: (Orange, D4) (Blue, D3)
- A 3 pin - Header connector Hvm → Humidity Sensor (HI 4-4030/31) → 5V, Az, GND
- 2: 4 pin - Header connector PRES → Pressure Sensor (SSC DANNISD PG A A5) → Female
- 1: 6 pin - Header Connector ACCEL → Accelerometer (ADXL 335) → Female
- 1: 3 pin - locking Header Temps → Temp Sensor (TMP36) → External male
- 1 = 6 pin - Header Open log → Female → Micro SD card reader.
- 1: Temp Sensor (TMP36) internal
- 1: 9V battery

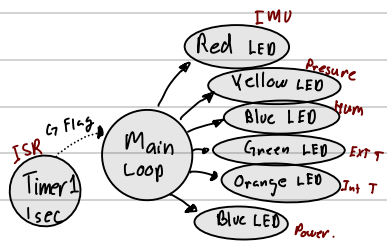

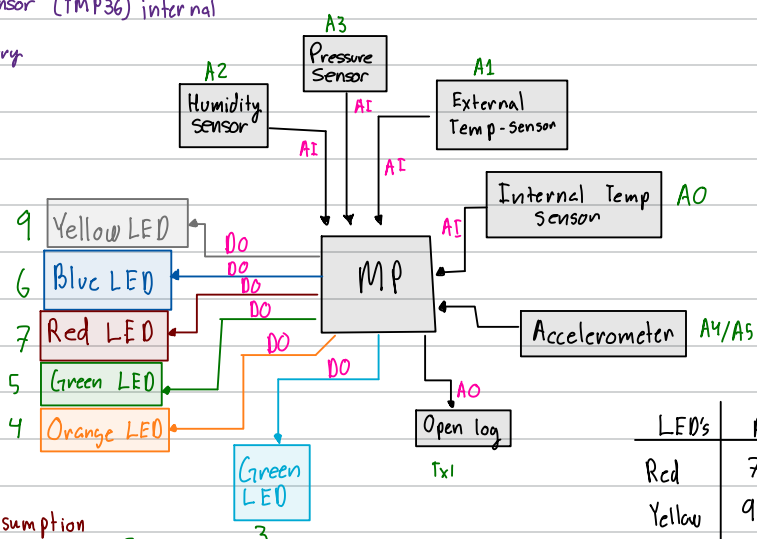

LED's	Pin	Function
Red	7	IMU
Yellow	9	Pressure
Blue	6	Humidity
Green	5	External
Orange	4	Internal
Blue	3	Arduino

Power Consumption

Arduino Uno — 50mA - 7g

Accelerometer — 0.5mA - 10g

Pressure - 1.5mA - 5g

Humidity - 1mA - 25g

Temp Sensor - 1mA - 20g

SD Card - 80mA - 2g

LED - 10mA → 146mA Power

Weight about 147grams